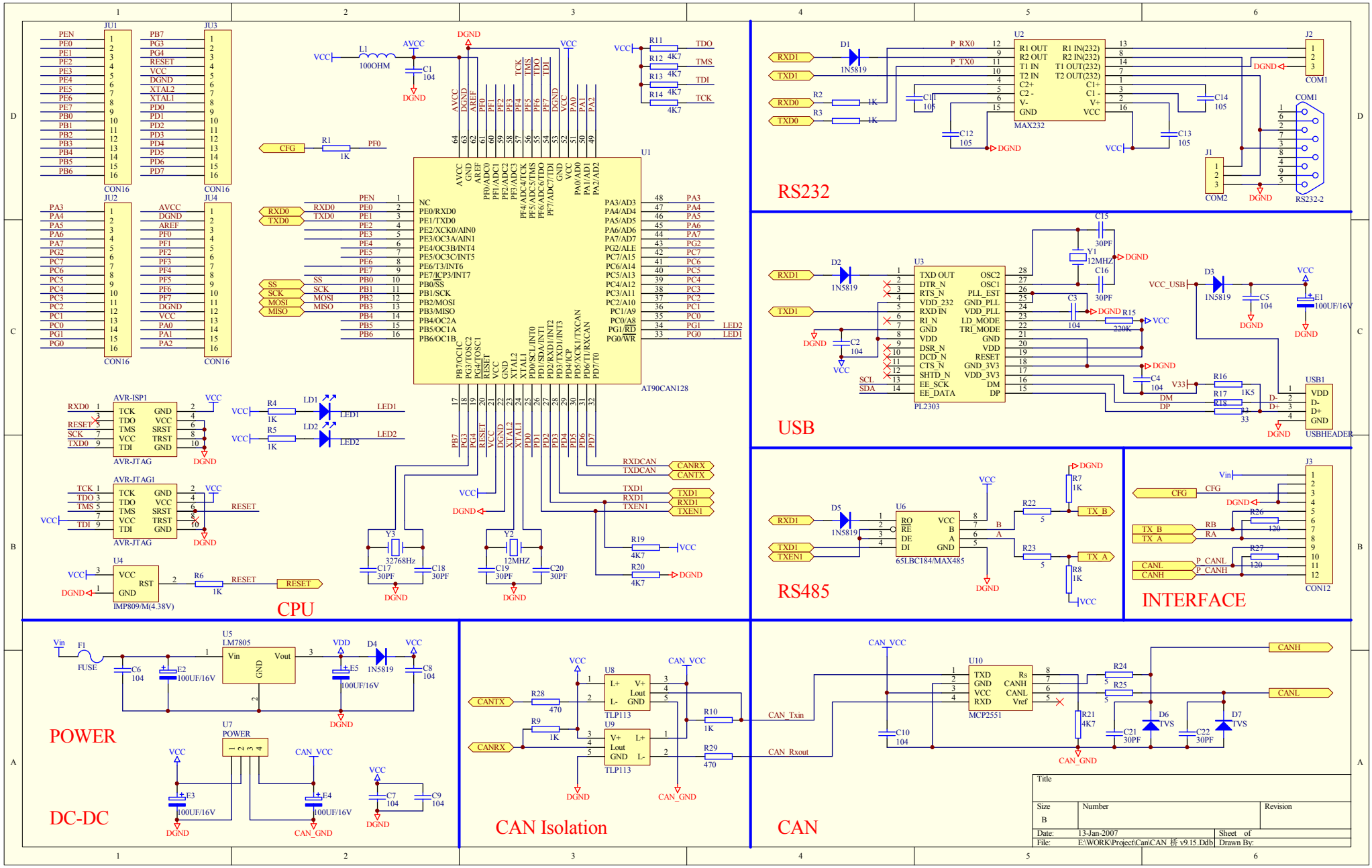
CPU
RS232
USB
RS485
INTERFACE
POWER
DC-DC
CAN Isolation
CAN
U1
AT90CAN128
U2
MAX232
U3
PL2303
U6
65LBC184/MAX485
U10
MCP2551
U5
LM7805
U7
POWER
U8
U9
TLP113
J2
COM1
J1
COM2
RS232-2
USB1
USBHEADER
J3
CON12
CON16
AVR-ISP1
AVR-JTAG
AVR-JTAG1
U4
IMP809/M(4.38V)
Title
Size
B
Number
Revision
Date: 13-Jan-2007
Sheet of
File: E:\WORK\Project\Can\CAN 桥 v9.15.Ddb
Drawn By: